Spare parts list

Ref: LPTB01519
Model: FLOOR WASHER CT55 BT55R GR/VE

Table: VACUUM - DBDB05666 Progressive number: 1

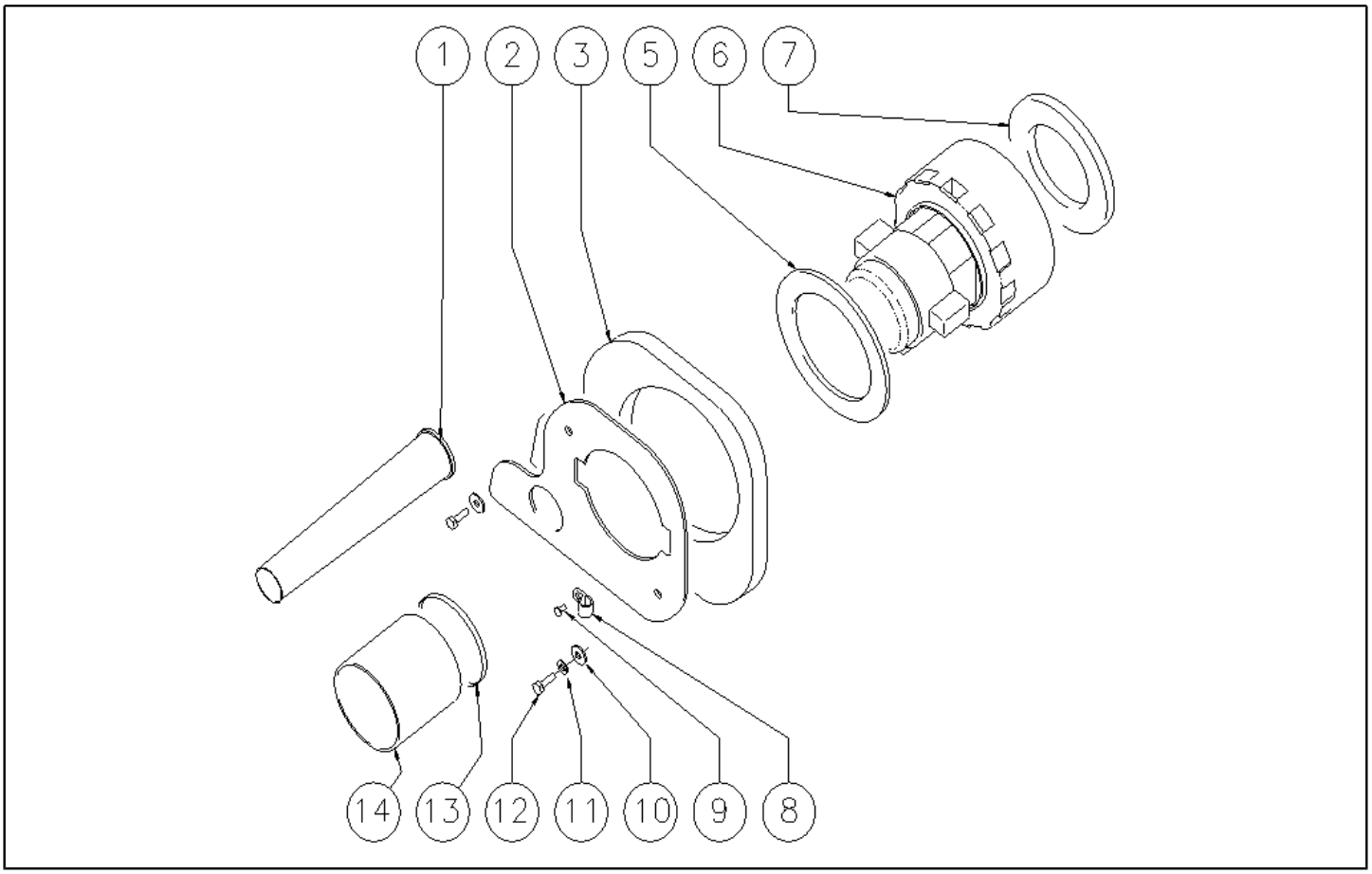

Ref. K	Part n.	Part n. 2	Description	Quantity	Validity From	Validity To	Price
0001	TBFX00244		TUBE D 34 L200MM	1,00		14/06/2007	--
0001	MPVR05259		TUBE SCARICO	1,00	15/06/2007		--
0002	LAFN06363		FLANGE ASPIRATORE	1,00			--
0003	MPVR05103		SOUND-PROOFING ASPIRATORE	1,00			--
0005	MPVR04724		FLANGE IN NYLON	1,00			--
0006	MOCC00253		MOTOR ASPIR.BIST.24V	1,00		04/11/2008	--
0006	MOCC00349		MOTOR VACUUM 2 STAGES 24V	1,00	05/11/2008		--
0006	MEVR05200		CARBON BRUSH VACUUM 116599-XX	2,00			--
0007	GUGO00272		GASKET VACUUM MOTOR CT	1,00			--
0008	FSVR00099		CLAMP FERMATUBO	1,00			--
0009	VTVT00813		SCREW M 4X 8 TCB-TC UNI 8112	1,00			--
0010	VTRS13945		WASHER D. 6X18 INX UNI 6593	2,00			--
0011	VTRS15144		WASHER D. 6 INX GRW UNI 1751	2,00			--
0012	VTVT15143		SCREW TE 6X16 UNI5739	2,00			--
0013	FSVR00500		CLAMP 80-100 INOX	1,00		30/04/2007	--
0013	FSVR00118		CLAMP D.94	1,00	01/05/2007		--
0014	TBFX00268		SUCTION HOSE D80 L=80MM	1,00		30/04/2007	--
0014	TBFX00312		TUBE ASPIRAZIONE	1,00	01/05/2007		--

Table: HEAD - DBDB07474

Progressive number: 1

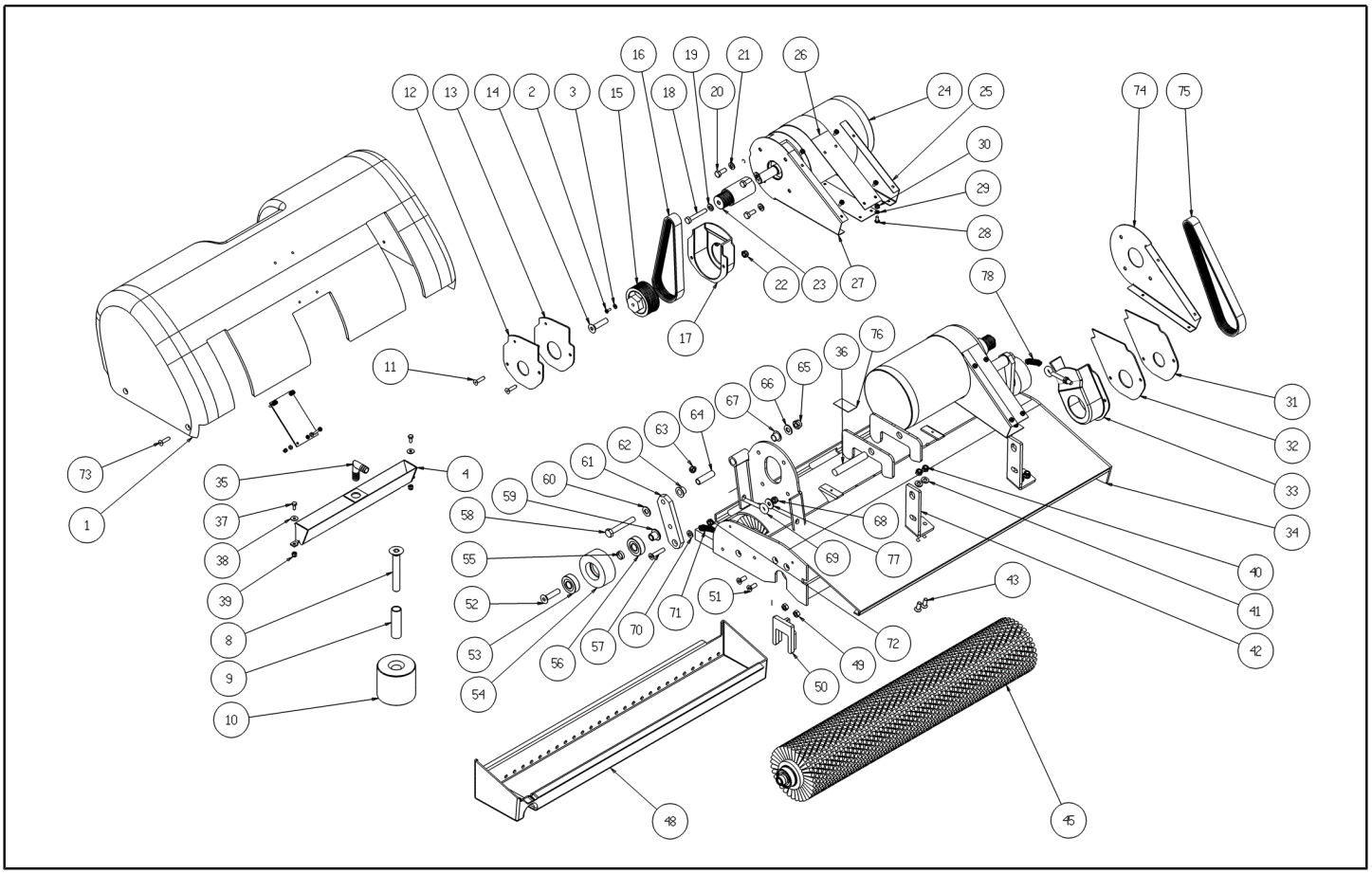

Ref. K	Part n.	Part n. 2	Description	Quantity	Validity From	Validity To	Price
0001	MPVR05597		COVER -	1,00			--
0002	VTVT00722		SCREW	1,00			--
0003	VTRS01579		WASHER D. 3 UNI 6592	1,00			--
0004	LAFN07873		LEVER -	1,00			--
0008	VTVT00885		SCREW TSPEI M.12-80	2,00			--
0009	LAFN04111		SPACER	2,00			--
0010	MPVR05607		ROLLER -	2,00		21/03/2016	--
0010	MPVR10560		ROLLER -	2,00	22/03/2016		--
0011	VTVT00704		SCREW TE M 4X 16 UNI5739 INOX	4,00			--
0012	MPVR05602		CLOSURE -	1,00			--
0013	MPVR05756		GASKET -	1,00			--
0014	VTVT00750		SCREW TSPE M. 6-16	2,00			--
0015	MTPL00208		PULLEY -	1,00			--
0016	MTCG00130		BELT POLI	1,00			--
0017	MPVR05601		PROTECTION -	1,00			--
0018	VTVT15145		SCREW TE 6X40 UNI5739 INX	1,00			--
0019	VTRS13945		WASHER D. 6X18 INX UNI 6593	1,00			--
0020	VTVT15143		SCREW TE 6X16 UNI5739	8,00			--
0021	VTRS15144		WASHER D. 6 INX GRW UNI 1751	8,00			--
0022	VTDD15925		NUT M 4 INX+ZN	4,00			--
0023	MTPL00205		PULLEY -	2,00			--
0024	MOCC00379		MOTOR -	2,00			--
0024	MEVR02027		CARBON -	2,00			--
0025	LAFN07820		CONVEYOR -	2,00			--
0026	LAFN07819		CONVEYOR -	2,00			--
0027	LAFN07817		CONVEYOR -	1,00			--
0028	VTVT00813		SCREW M 4X 8 TCB-TC UNI 8112	16,00			--
0029	VTRS00515		WASHER D. 4 INX	16,00			--
0030	VTDD00055		NUT M 4 ATB A2	16,00			--
0031	MPVR05600		CLOSURE -	1,00			--
0032	MPVR05757		GASKET -	1,00			--
0033	MPVR05599		PROTECTION -	1,00			--
0034	LAFN06764		HEAD 55	1,00			--
0035	RCVR45752		HOSE FITTING "L" 3/8M - D.10 PLS.	1,00			--
0036	LAFN07633		PIN -	1,00			--
0037	VTVT00817		SCREW TE M4x12 UNI 5739 INOX	2,00			--
0038	VTRS00515		WASHER D. 4 INX	2,00			--
0039	VTDD15925		NUT M 4 INX+ZN	2,00			--
0040	VTDD01694		NUT M6 INOX	4,00			--
0041	VTRS00245		WASHER D.6 UNI 6592 INOX	4,00			--
0042	LAFN07634		BRACKET -	2,00			--
0043	VTVT00832		SCREW TSPEI M6X16 INOX	4,00			--
0045	SPPV01163		BRUSH ROLLER L.55 D.100 B-0.3	2,00			--
0048	MPVR05603		DRAWER -	1,00			--

Table: HEAD - DBDB07474

Progressive number: 1

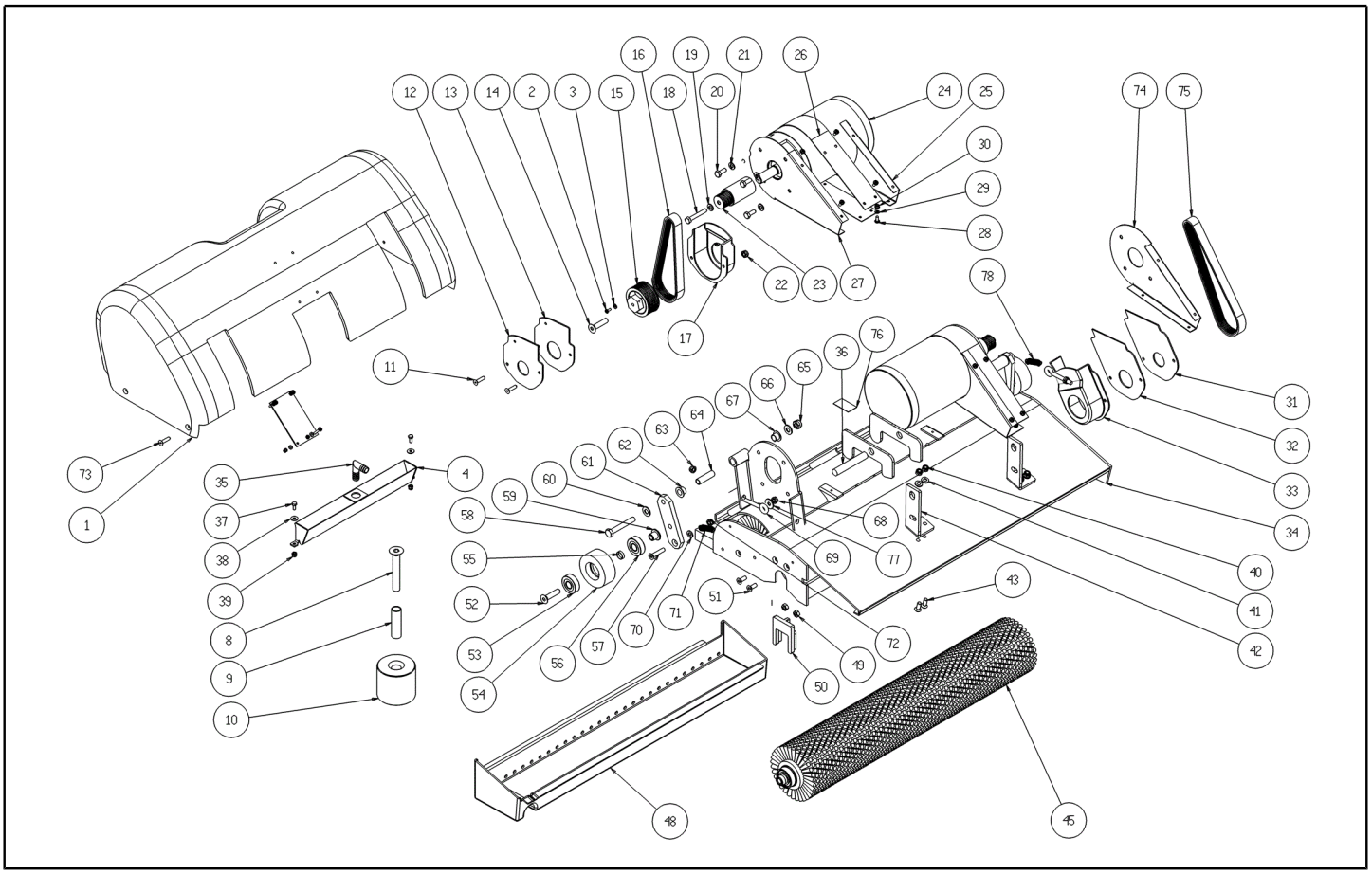

Ref. K	Part n.	Part n. 2	Description	Quantity	Validity From	Validity To	Price
0049	VTDD15518		NUT M 6 INX	4,00			--
0050	MPVR31929		SUPPORT ROLLER BRUSH	2,00			--
0051	VTVT00750		SCREW TSPE M. 6-16	4,00			--
0052	VTVT00816			2,00			--
0053	CUVR00004		BEARING 6201 2RS -MARCA-	2,00			--
0054	MTPL00206		PULLEY -	2,00			--
0055	LAFN07804		SPACER -	2,00			--
0056	CUVR00004		BEARING 6201 2RS -MARCA-	2,00			--
0057	VTVT30246		SCREW TSPEI M 6X 30 UNI 5933	2,00			--
0058	VTVT00728		SCREW TE M. 8-55	2,00			--
0059	LAFN51068		BUSHING LEVA POSTER.	2,00			--
0060	VTRS13947		WASHER D. 8 INX UNI 6592	1,00			--
0061	LAFN07769		BRACKET -	2,00			--
0062	CUVR43254		BUSHING CB 85 1010 18T	2,00			--
0063	VTDD01694		NUT M6 INOX	2,00			--
0064	LAFN07799		SPACER 10-8 L 39,9	2,00			--
0065	VTDD01695		NUT M 8 INX	2,00			--
0066	VTRS13947		WASHER D. 8 INX UNI 6592	2,00			--
0067	CUVR43254		BUSHING CB 85 1010 18T	2,00			--
0068	VTDD01694		NUT M6 INOX	2,00			--
0069	LAFN05186		TIE ROD	2,00			--
0070	VTDD15518		NUT M 6 INX	2,00			--
0071	MLML75961		SPRING TRAZ.NUOVA D.16 L.70 ZB	1,00			--
0072	VTDD01694		NUT M6 INOX	2,00			--
0073	VTVT00855		SCREW TSP+ M4X15	4,00			--
0074	LAFN07815		CONVEYOR -	1,00			--
0075	MTCG00129		BELT POLI	1,00			--
0076	GUVR01008		GASKET -	2,00			--
0077	VTRS13945		WASHER D. 6X18 INX UNI 6593	2,00			--
0078	MLML00065		SPRING L0=80 De=12 Df=1.7	1,00			--

Table: REGULAT.BRUSHES - DBDB07477 Progressive number: 1

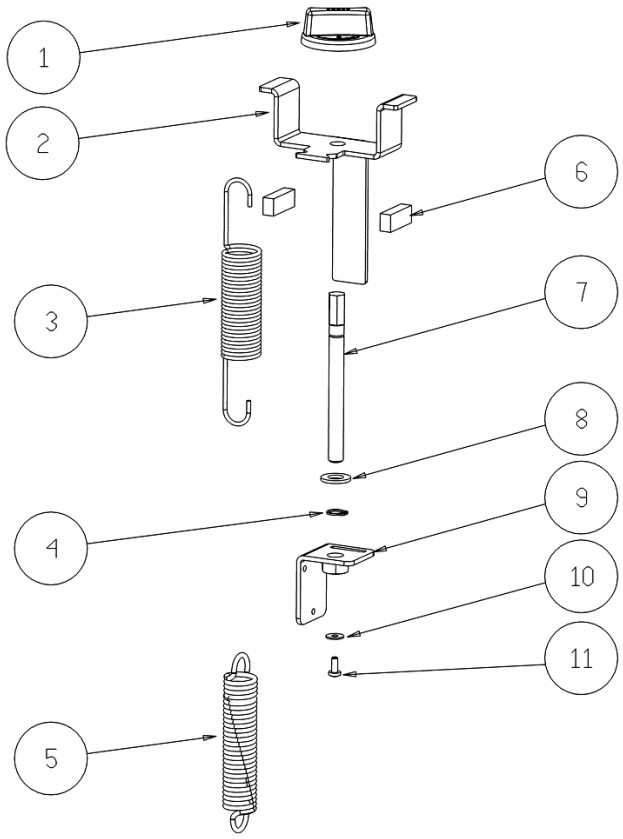

Ref. K	Part n.	Part n. 2	Description	Quantity	Validity From	Validity To	Price
0001	MPVR75768		KNOB DI REGOLAZIONE PRESS	1,00			--
0002	LAFN07458		SUPPORT -	1,00			--
0003	MLML00234		SPRING TESTATA LINEA 3	1,00			--
0004	VTAE13511		CIRCLIP D. 10 UNI 7435	1,00			--
0005	MLML00225		SPRING	1,00			--
0006	GUGO00315		MOUSSE CT25	2,00			--
0007	LAFN07457		SUPPORT -	1,00			--
0008	VTRS15523		WASHER D.10 X21 INOX UNI 6592	1,00			--
0009	LAFN07459		SUPPORT -	1,00			--
0010	VTRS00251		WASHER 4-16 INOX A2	1,00			--
0011	VTVT21887		SCREW TCB-TC 4X10 8112	1,00			--

Table: PACKING - DBDB07480 Progressive number: 1

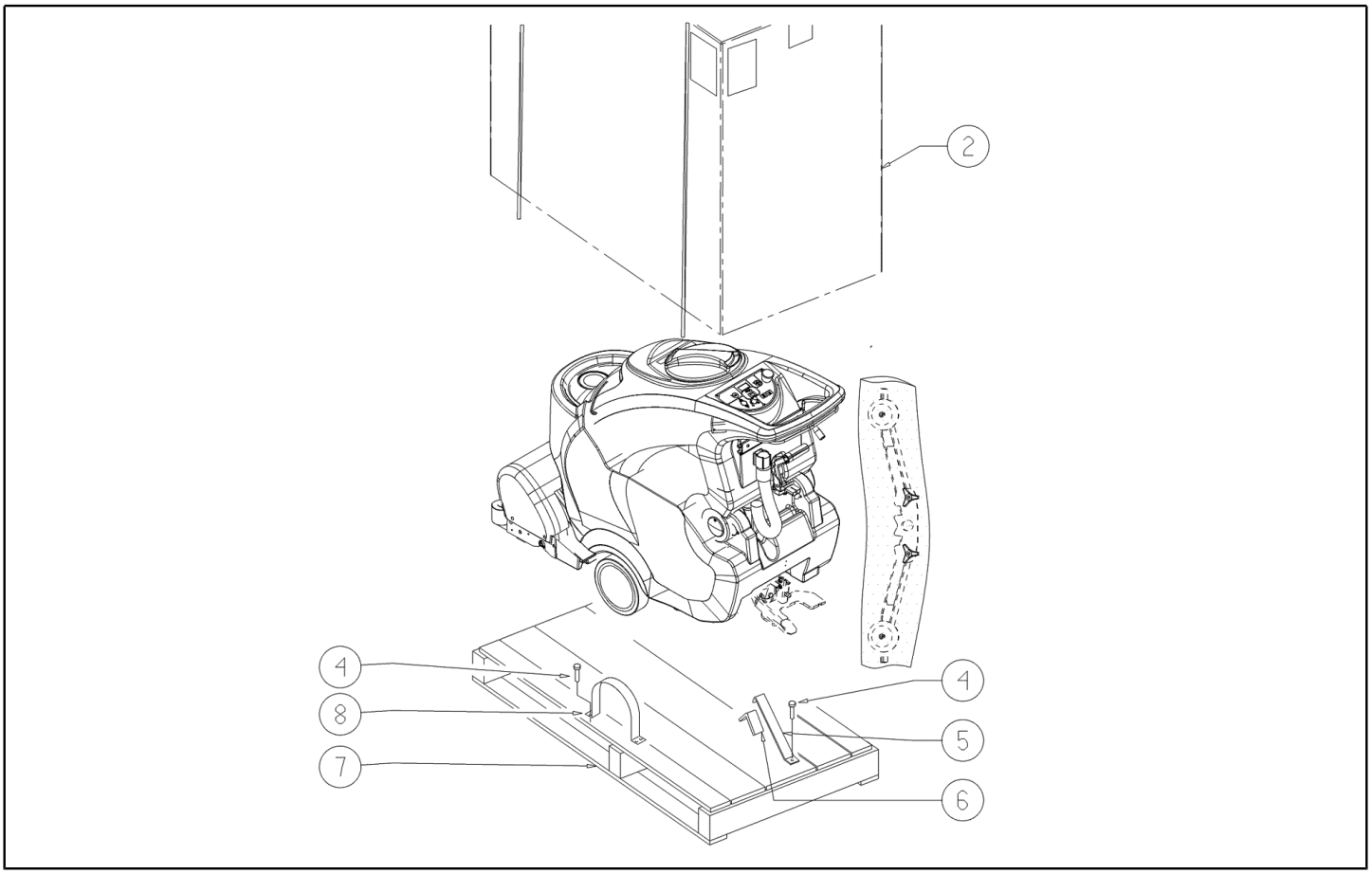

Ref. K	Part n.	Part n. 2	Description	Quantity	Validity From	Validity To	Price
0002	MICT00196		BOX	1,00			--
0004	VTVT00043		SCREW AUTOF.LEGNO 4,5X25 TS BR	9,00			--
0005	MIVR00137		CLAMP RUOTA POSTERIORE X IMBAL.	1,00			--
0006	GUGO00009		MOUSSE	0,05			--
0007	MIBA00054		PALLET Scrubber 40/62B/BF/A	1,00			--
0008	MIVR00135		CLAMP RUOTA POSTERIORE X IMBAL.	2,00			--

Table: TRACTION MOTOR - DBDB09351 Progressive number: 1

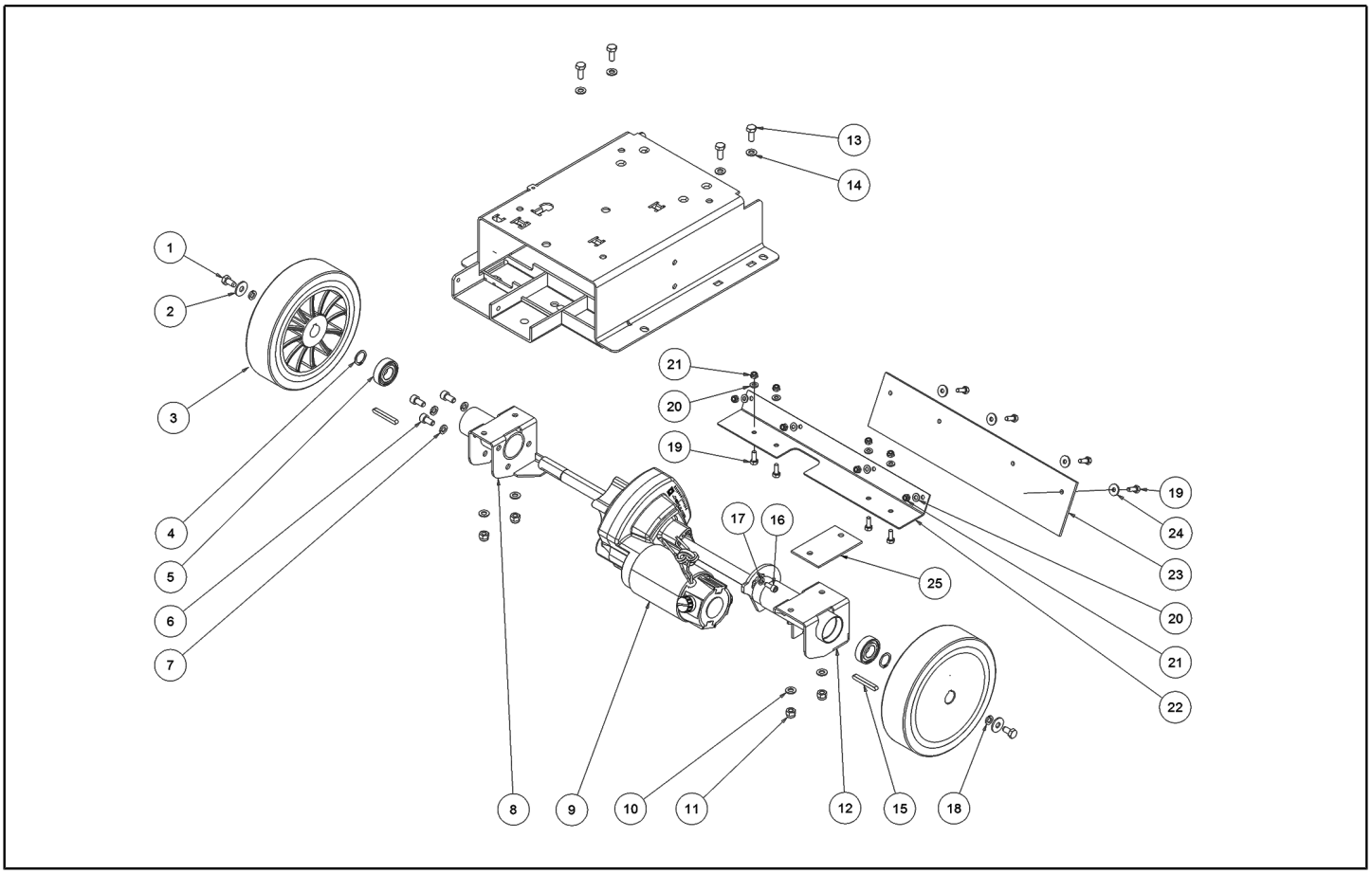

Ref. K	Part n.	Part n. 2	Description	Quantity	Validity From	Validity To	Price
0001	VTVT15916		SCREW TE M 8X 16 UNI 5739 A2	2,00			--
0002	VTRS13946		WASHER D. 8 X24 INX UNI 6593	2,00			--
0003	RTRT00546		WHEEL D.200	2,00			--
0004	VTAE06193		CIRCLIP D. 20 UNI 7435	2,00			--
0005	CUVR00190		BEARING 6004 2RS INOX	2,00			--
0006	VTVT00876		SCREW TCEI M.8-16	3,00			--
0007	VTRS15146		WASHER GROVER A2 UNI1751	3,00			--
0008	LAFN08972		BRACKET SX	1,00			--
0009	MOCC00022		CARBON FOR MOCC86902-MOCC00395	2,00			--
0009	MOCC00396		MOTOR	1,00			--
0010	VTRS13947		WASHER D. 8 INX UNI 6592	4,00			--
0011	VTDD01695		NUT M 8 INX	4,00			--
0012	LAFN08971		BRACKET DX	1,00			--
0013	VTVT15916		SCREW TE M 8X 16 UNI 5739 A2	4,00			--
0014	VTRS13947		WASHER D. 8 INX UNI 6592	4,00			--
0015	VTVR00566		KEY 6X10X40 UNI 6604 A (H.10)	2,00			--
0016	VTVT00717		SCREW TCEI M. 6-16	2,00			--
0017	VTRS15144		WASHER D. 6 INX GRW UNI 1751	2,00			--
0018	VTRS15144		WASHER D. 6 INX GRW UNI 1751	2,00			--
0019	VTVT15143		SCREW TE 6X16 UNI5739	8,00			--
0020	VTRS00245		WASHER D.6 UNI 6592 INOX	8,00			--
0021	VTDD01694		NUT M6 INOX	8,00			--
0022	LAFN07951		BRACKET CT40-90	1,00			--
0023	MPVR06073		FLAP -	1,00			--
0024	VTRS13945		WASHER D. 6X18 INX UNI 6593	4,00			--
0025	MPVR10764		PROTECTION .	1,00	31/08/2016		--

Table: TANK - DBDB09352

Progressive number: 1

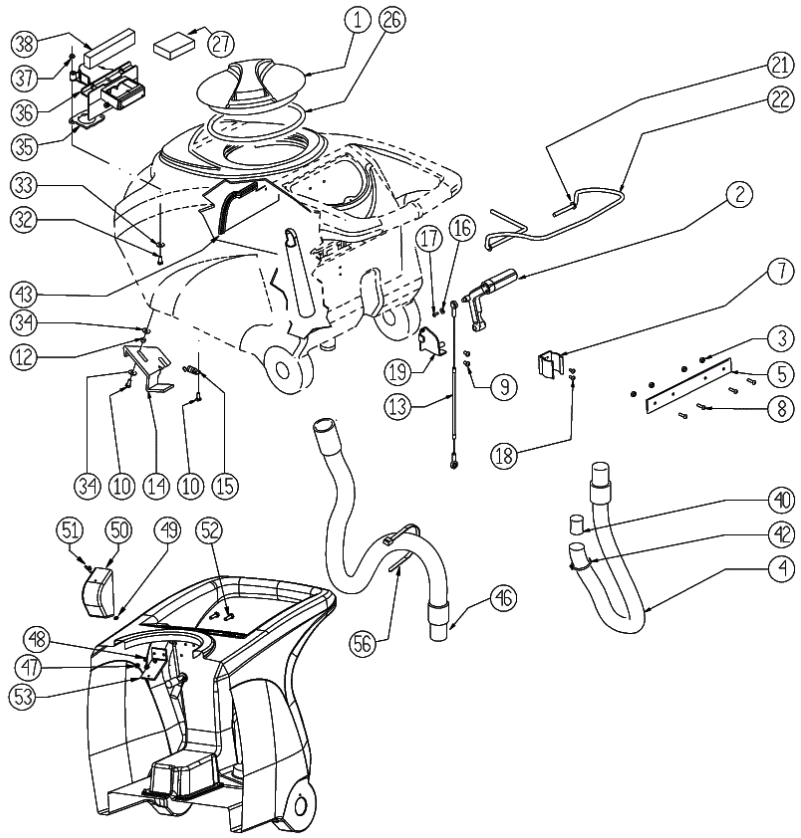

Ref. K	Part n.	Part n. 2	Description	Quantity	Validity From	Validity To	Price
0001	MPVR04051		TANK CAP	1,00			--
0002	MPVR49942		LEVER SQUEEGEE LIFTING PP	1,00			--
0003	VTDD15518		NUT M 6 INX	4,00			--
0004	TBFX00348		TUBE CT40-70-90 HOSE DRAIN	1,00		07/10/2020	--
0004	TBFX01299		HOSE DRAIN PU MY'21 CT40/70/90	1,00	08/10/2020		--
0005	LAFN05865		PLATE COPRILEVA CONSENSO	1,00			--
0007	MPVR46988		CLIP FIXATION DRAIN HOSE	1,00			--
0008	VTVT07726		SCREW TE 5X20	4,00			--
0009	VTVT01300		SCREW TE M5X12 INOX	2,00			--
0010	VTVT15143		SCREW TE 6X16 UNI5739	3,00			--
0012	LAFN03626		SPACER	2,00			--
0013	CMCV00460		CABLE STEEL, LIFTING SQUEEGEE	1,00			--
0014	LAFN06849		HANDLE CT 70	1,00			--
0015	MLML34726		SPRING TR E350 N	1,00			--
0016	VTRS05904		WASHER UNI 6592 4X16 ZB	1,00			--
0017	VTVT00718		SCREW TC+ M. 4,8-13	1,00			--
0018	VTVT37012		SCREW M 4X 10 TCB-TC INX	2,00			--
0019	LAFN05870		BRACKET SQUEEGEE LIFTING	1,00			--
0021	VTRS13947		WASHER D. 8 INX UNI 6592	2,00			--
0022	LAFN05861		LEVER CONSENSO SPAZZOLE	1,00		15/07/2014	--
0022	LAFN09339		LEVER HANDLE ACTIVATION	1,00	16/07/2014		--
0026	GUGO00263		GASKET SEAL CAP REC. TANK	1,00			--
0027	FTDP00133		FILTER VACUUM MOTOR	1,00			--
0032	VTVT00814		SCREW TE M.4-25	2,00			--
0033	VTRS00251		WASHER 4-16 INOX A2	2,00			--
0034	VTRS00274		WASHER NYLON 66 D.8,4-17-2 UNI	4,00			--
0035	GUGO00417		GASKET SCATOLA ASPIRAZIONE	1,00			--
0036	MPVR05482		BOX -	1,00			--
0037	VTDD15925		NUT M 4 INX+ZN	2,00			--
0038	GUGO00449		GASKET CT55	1,00			--
0040	GUGO00245		GASKET	1,00		07/10/2020	--
0042	FSVR43136		CLAMP D. 35-40 DF.	1,00		07/10/2020	--
0042	FSVR00095		CLAMP 30-45	1,00	08/10/2020		--
0043	MPVR06063		PLATE CT55	1,00			--
0046	KTRI04696		KIT REPLACEMENT TBFX00353	1,00			--
0047	VTDD01693		NUT M 5 INX	2,00			--
0048	VTRS00516		WASHER D. 5 INX	2,00			--
0049	VTVR01038		WASHER -	1,00			--
0050	MPVR05596		PROTECTION -	1,00			--
0051	VTVT01150		SCREW 4x10	1,00			--
0052	VTVT00641		SCREW	2,00			--
0053	LAFN07631		BRACKET -	1,00			--
0056	FSVR00248		CLAMP -	1,00			--

Table: WATER TANK - DBDB09353

Progressive number: 1

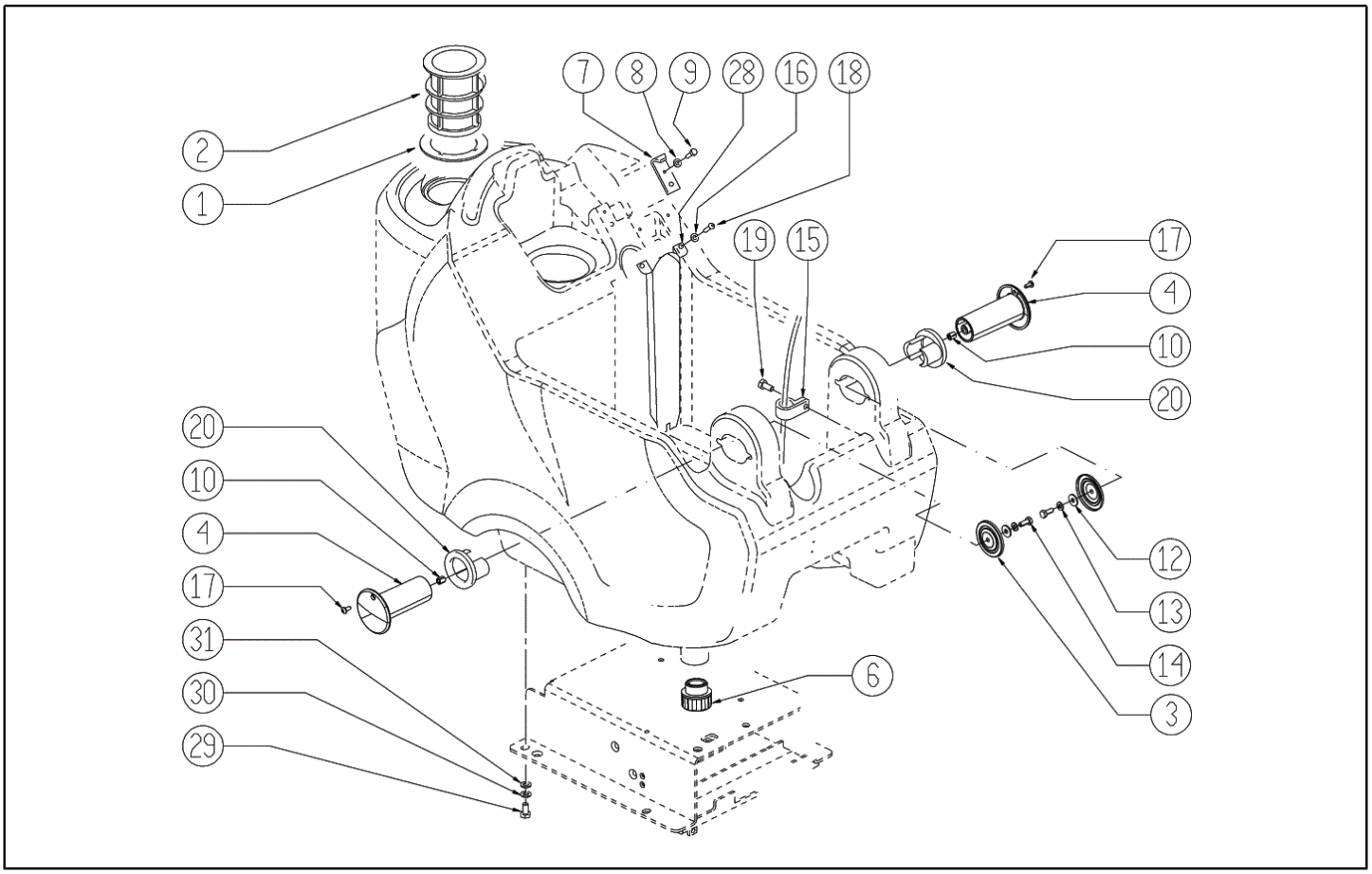

Ref. K	Part n.	Part n. 2	Description	Quantity	Validity From	Validity To	Price
0001	GUGO00450		GASKET CT55	1,00			--
0002	FTAC00040		FILTER -	1,00		26/05/2013	--
0002	FTAC48857		FILTER SOLUTION TANK INLET	1,00	27/05/2013		--
0003	LAFN07800		SHEET METAL PA. -	2,00			--
0004	MPVR48695		PIN SHK.BK	2,00		11/09/2014	--
0004	MPVR06407		PIN -	2,00	12/09/2014		--
0006	MPVR08003		CAP	1,00		11/12/2016	--
0006	MPVR10774		CAP 1/2"	1,00	12/12/2016		--
0007	LAFN06489		PLATE	1,00			--
0008	VTRS15144		WASHER D. 6 INX GRW UNI 1751	1,00			--
0009	VTVT01303		SCREW TE M6-10 INOX	1,00			--
0010	VTVR48693		INSERT FILETTATO M6	2,00			--
0012	VTRS13945		WASHER D. 6X18 INX UNI 6593	2,00			--
0013	VTRS15144		WASHER D. 6 INX GRW UNI 1751	2,00			--
0014	VTVT15143		SCREW TE 6X16 UNI5739	2,00			--
0015	MPVR02933		DUCT LOCK D.9,5	2,00		08/04/2013	--
0015	FSVR00244		CLAMP -	1,00	09/04/2013		--
0016	VTRS00515		WASHER D. 4 INX	2,00			--
0017	VTVT48694		SCREW TCB TC 5 X12 UNI 9707 TZ	2,00		11/09/2014	--
0018	VTVT37012		SCREW M 4X 10 TCB-TC INX	2,00			--
0019	VTVT15961		SCREW M 5X 16 TCB TC UNI 7687	1,00		08/04/2013	--
0019	VTVT01300		SCREW TE M5X12 INOX	1,00	09/04/2013		--
0020	PMVR02028		RUBBER GRUPPO MONTAGGIO	2,00			--
0028	MPVR51085		MANIFOLD FOR VACUUM MOT.EXHAUST	1,00			--
0029	VTVT15916		SCREW TE M 8X 16 UNI 5739 A2	4,00			--
0030	VTRS00269		WASHER D. 8 DIN 6798-A INX A2	4,00			--
0031	VTRS13947		WASHER D. 8 INX UNI 6592	4,00			--

Table: ELECTRI.INSTAL. - DBDB09356 Progressive number: 1

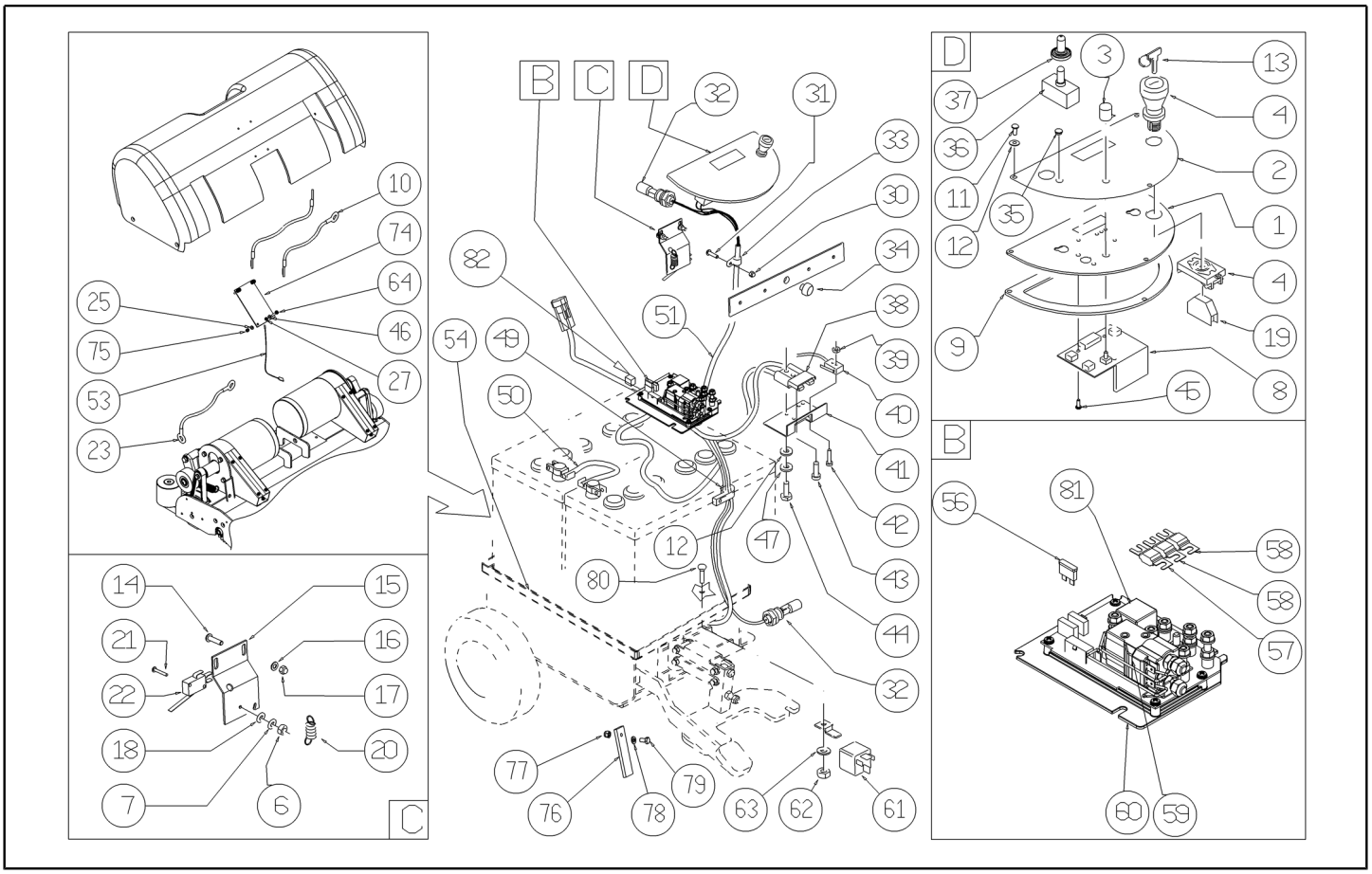

Ref. K	Part n.	Part n. 2	Description	Quantity	Validity From	Validity To	Price
000D	MECE00586		BOARD CT40/CT70 R 2013	1,00			--
0001	LAFN08989		SUPPORT -	1,00			--
0002	ETET01710		LABEL -	1,00			--
0003	MEVR01666		KNOB POTENTIOMETER	1,00			--
0004	MECI00402		SWITCH KEY + EMERGENCY	1,00			--
0006	VTDD21115		NUT M 3 INOX	1,00			--
0007	VTRS00268		WASHER D.3	5,00			--
0008	MECE00586		BOARD CT40/CT70 R 2013	1,00			--
0009	GUGO38417		GASKET PANN.COM.EXTREME	1,00			--
0011	VTVT37012		SCREW M 4X 10 TCB-TC INX	3,00			--
0012	VTRS00515		WASHER D. 4 INX	9,00			--
0013	CHVR00051		KEYS SET SPARE SCRUBBERS W.B.	1,00			--
0014	VTVT07725		SCREW TE 5X16 UNI5739 INX	2,00			--
0015	LAFN05904		PLATE MICRO LEVA	1,00			--
0016	VTRS00516		WASHER D. 5 INX	2,00			--
0017	VTDD01693		NUT M 5 INX	4,00			--
0018	VTRS21116		WASHER D. 3 INX	2,00			--
0019	MECI00403		CONTACT -	1,00			--
0020	MLML00203		SPRING	1,00			--
0021	VTVT01316		SCREW TC+ M3-16	2,00			--
0022	MECI36393		MICROSWITCH ACTIVATION TRCTN.	1,00			--
0025	VTRS21116		WASHER D. 3 INX	4,00			--
0027	VTDD21115		NUT M 3 INOX	4,00			--
0030	VTDD15925		NUT M 4 INX+ZN	1,00			--
0031	VTVT00704		SCREW TE M 4X 16 UNI5739 INOX	1,00			--
0032	MECI00516		SENSOR FLOAT WATER TANK	2,00			--
0033	FSVR00099		CLAMP FERMATUBO	1,00			--
0034	MPVR00043		CAP CHIUS.FORO PORTAFUS.L 15	1,00			--
0035	RCVR00164			1,00			--
0036	MECI30499		SWITCH 10A - 250VAC	1,00			--
0037	MEVR01975		RUBBER DEVIATORE	1,00			--
0038	MEVR01707		CONNECTOR SB50 RED	1,00			--
0039	VTDD08634		NUT M2	2,00			--
0040	MECI00334		MICROSWITCH CHARGING PLUG	1,00			--
0041	LAFN06409		SUPPORT -	1,00			--
0042	VTVT00671		SCREW TC- M.2-16 OTTONE	2,00			--
0043	VTVT00872		SCREW TSP+ 2.9X13 AUTOFIL. INOX	1,00			--
0044	VTVT00814		SCREW TE M.4-25	2,00			--
0045	VTVT00722		SCREW	3,00			--
0046	VTRS21116		WASHER D. 3 INX	4,00			--
0047	VTRS15913		WASHER D. 4 GROVER A2 UNI1751	2,00			--
0049	FSVR00099		CLAMP FERMATUBO	1,00			--
0050	MEVR34820		WIRING BATTERY BRIDGE W/TERMINAL	1,00			--
0051	MECB01334		WIRING CT40-55-70 BT	1,00		21/03/2016	--

Table: ELECTRI.INSTAL. - DBDB09356

Progressive number: 1

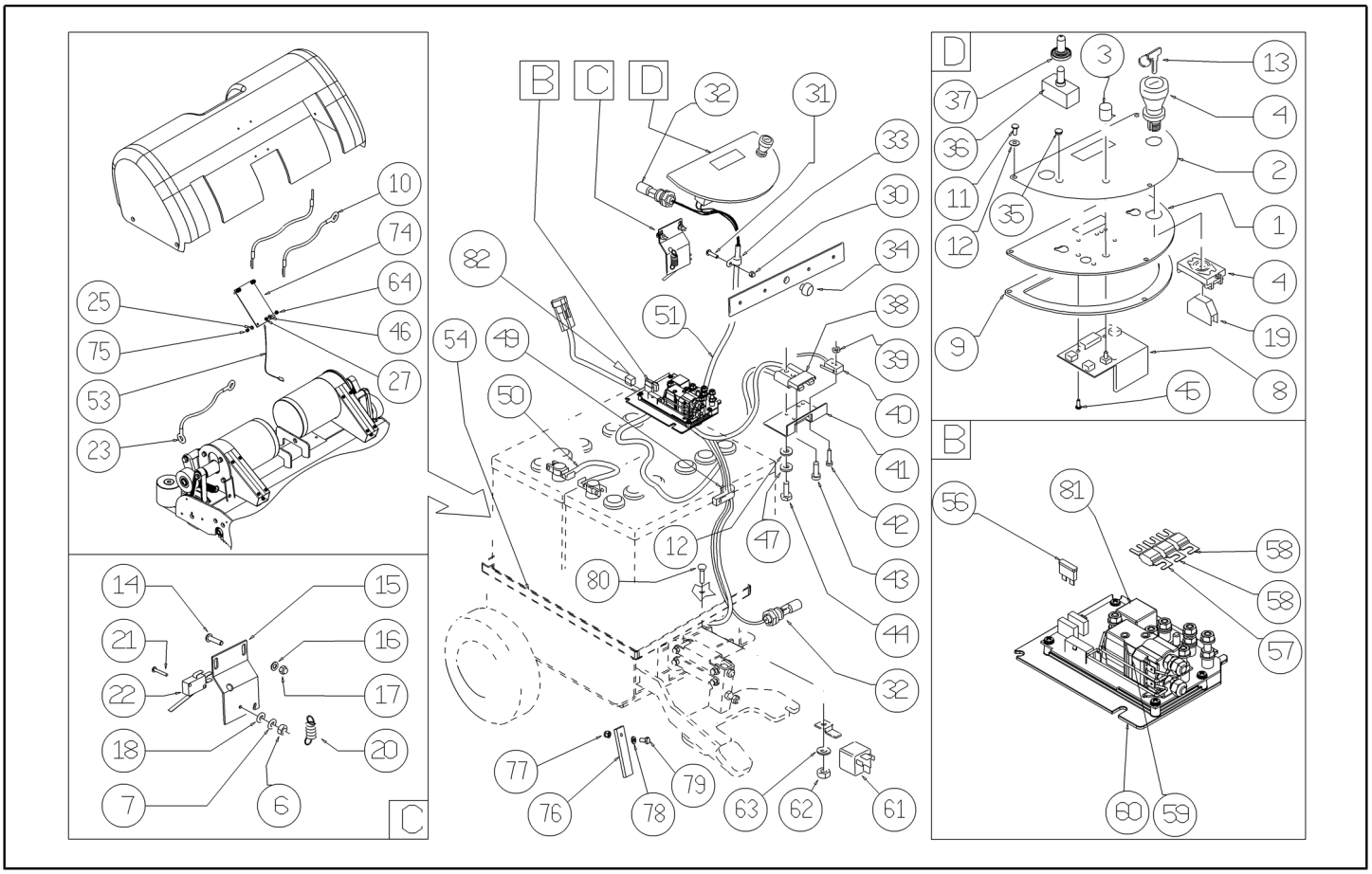

Ref. K	Part n.	Part n. 2	Description	Quantity	Validity From	Validity To	Price
0051	MECB01374		WIRING CT40-55-70 RULLI	1,00	22/03/2016		--
0053	MECB01127		CABLE -	1,00			--
0054	LAFN35588		BATTERY SUPPORT CT LINE	1,00			--
0056	MEVR01428		FUSE 2 A UNIVAL	1,00			--
0057	MEVR02061		FUSE 80A	1,00		31/12/2015	--
0057	MEVR02105		FUSE 50A OMEGA FT3050	1,00	01/01/2016		--
0058	MEVR02060		FUSE 40A	2,00			--
0059	METT00085		CONTACTOR 100A	1,00			--
0060	MECE00574		BOARD RELAY CT40-70-90 B-BT	1,00			--
0061	MECI00005		RELAY 24V 10/20A	1,00			--
0062	VTDD01694		NUT M6 INOX	1,00			--
0063	VTRS00245		WASHER D.6 UNI 6592 INOX	1,00			--
0064	VTVT00654		SCREW TC+ M.3-20	4,00			--
0074	MECE00491		BOARD 40ECS CURRENT READER LED	1,00			--
0076	MPVR04693		RUBBER CONDUCTIVE	1,00			--
0077	VTDD01694		NUT M6 INOX	1,00			--
0078	VTRS00245		WASHER D.6 UNI 6592 INOX	1,00			--
0079	VTVT15143		SCREW TE 6X16 UNI5739	1,00			--
0080	VTVT01676		SCREW TSTC UNI 7688 M6X16	1,00			--
0082	GUGO00460		MOUSSE 20x15x18	1,00	25/05/2015		--

Table: FRAME - DBDB09360

Progressive number: 1

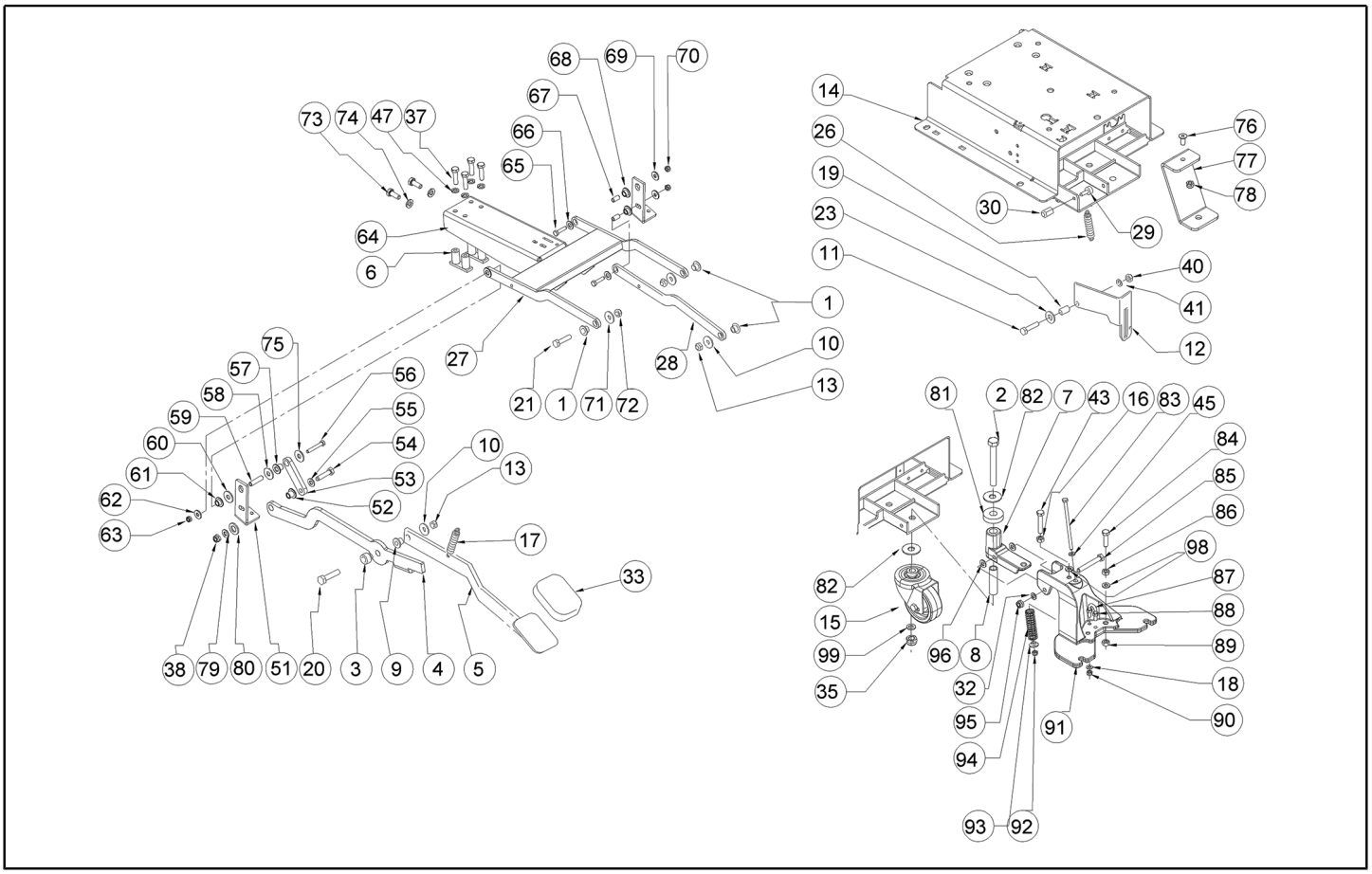

Ref. K	Part n.	Part n. 2	Description	Quantity	Validity From	Validity To	Price
0001	LAFN06391		BUSHING BRUSH DECK SUPPORT	6,00			--
0002	VTVT00285		SCREW TE M12X110	1,00			--
0003	LAFN04190		BUSHING PARALLELOGR.TEST.GR.	1,00			--
0004	LAFN07593		BRACKET LIFTING BRUSH HEAD	1,00			--
0005	LAFN07602		LEVER -	1,00		08/04/2013	--
0005	LAFN09270		PEDAL BRUSH HEAD LIFTING	1,00	09/04/2013		--
0006	LAFN07603		BRACKET -	2,00			--
0007	MFVR00226		SUPPORT SQUEEGEE	1,00			--
0008	LAFN09006		PIN -	1,00			--
0009	LAFN51068		BUSHING LEVA POSTER.	1,00			--
0010	VTRS13946		WASHER D. 8 X24 INX UNI 6593	2,00			--
0011	VTVT00161		SCREW TE M6X20	1,00		26/02/2019	--
0011	VTVT13939		SCREW TE 6X20 UNI5739 INX	1,00	27/02/2019		--
0012	LAFN10124		PLATE	1,00			--
0013	VTDD01695		NUT M 8 INX	3,00			--
0014	LAFN07606		BASE -	1,00			--
0015	RTRT00395		WHEEL CASTOR D.80X25 PU	1,00			--
0016	VTDD15521		NUT M 8 INX A2 UNI 5588	1,00			--
0017	MLML34726		SPRING TR E350 N	1,00			--
0018	VTRS00245		WASHER D.6 UNI 6592 INOX	2,00			--
0019	LAFN03840		BUSHING	1,00			--
0020	VTVT15917		SCREW TE M 8X50 INOX A2 UNI	1,00			--
0021	VTVT15907		SCREW TE 8X25 UNI5739 INX	3,00			--
0023	VTRS00274		WASHER NYLON 66 D.8,4-17-2 UNI	1,00			--
0026	MLML00303		SPRING L=54,1 D.=9,4	1,00			--
0027	LAFN07563		ARM -	1,00			--
0028	LAFN06389		ARM PARALLELOGRAMMA	1,00			--
0029	MPVR75799		FOOT 20X9 M6X18	1,00			--
0030	VTVR00215			1,00			--
0032	VTRS13947		WASHER D. 8 INX UNI 6592	1,00			--
0033	MPVR05186		COVER -	1,00			--
0035	VTDD00176		NUT M.12 INOX A2 BASSO AUTOB.	1,00			--
0037	VTVT15907		SCREW TE 8X25 UNI5739 INX	4,00			--
0038	VTDD01695		NUT M 8 INX	1,00			--
0040	VTDD01694		NUT M6 INOX	5,00			--
0041	VTRS00245		WASHER D.6 UNI 6592 INOX	1,00			--
0043	VTVT15371		SCREW TE M 8X45 INOX A2 UNI	1,00			--
0045	VTRS00245		WASHER D.6 UNI 6592 INOX	1,00			--
0047	VTRS15146		WASHER GROVER A2 UNI1751	4,00			--
0051	LAFN07634		BRACKET -	2,00			--
0052	LAFN51068		BUSHING LEVA POSTER.	1,00			--
0053	LAFN07638		LEVER -	1,00			--
0054	VTVT00410		SCREW TE M8x35 UNI5739 INOX	1,00			--
0055	VTRS13947		WASHER D. 8 INX UNI 6592	1,00			--

Table: FRAME - DBDB09360

Progressive number: 1

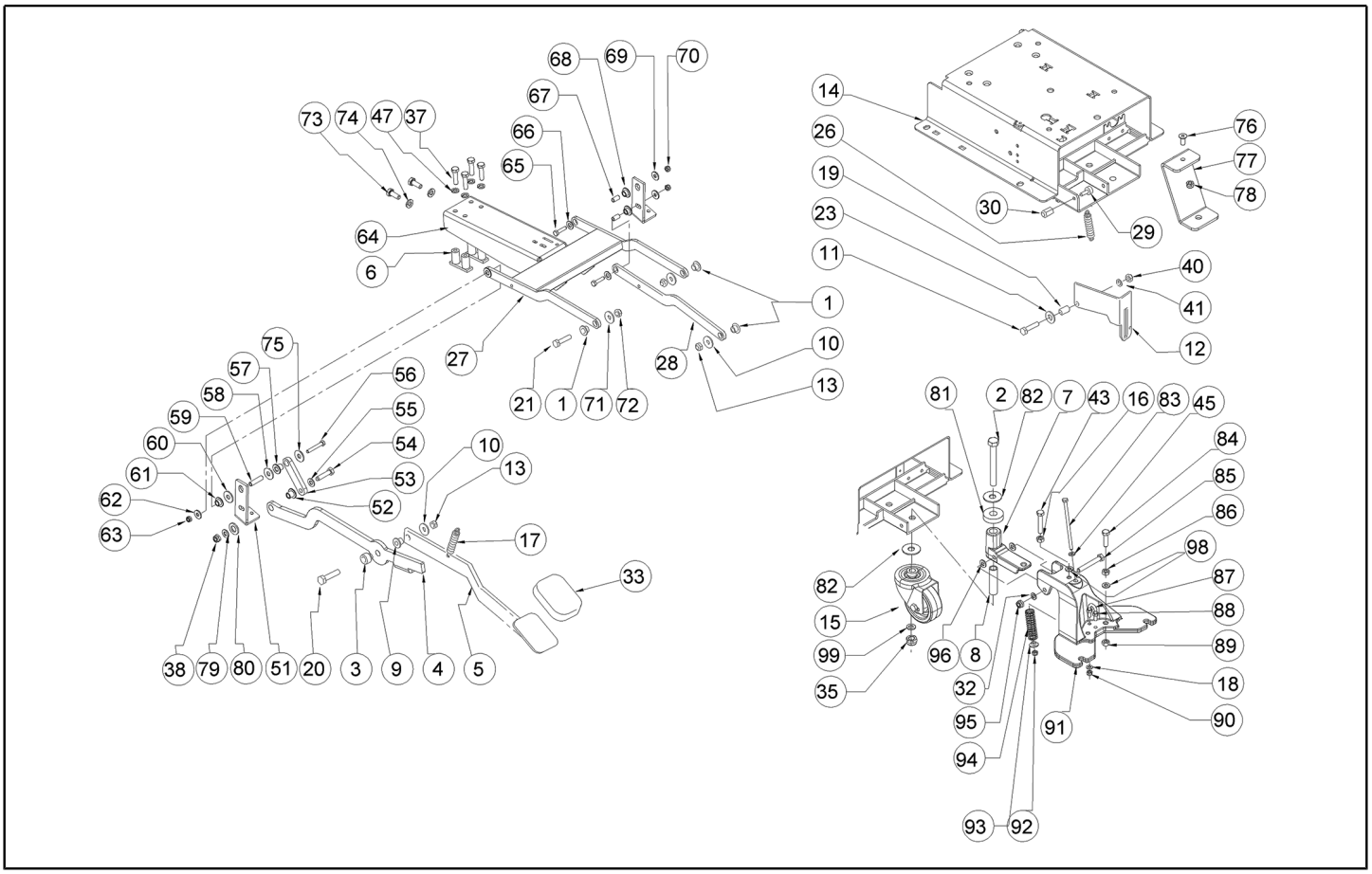

Ref. K	Part n.	Part n. 2	Description	Quantity	Validity From	Validity To	Price
0056	VTVT15145		SCREW TE 6X40 UNI5739 INX	1,00			--
0057	LAFN51068		BUSHING LEVA POSTER.	1,00			--
0058	VTRS13946		WASHER D. 8 X24 INX UNI 6593	1,00			--
0059	LAFN06735		SPACER 6-8 H31.5	1,00			--
0060	VTRS13946		WASHER D. 8 X24 INX UNI 6593	1,00			--
0061	LAFN06391		BUSHING BRUSH DECK SUPPORT	1,00			--
0062	VTRS13945		WASHER D. 6X18 INX UNI 6593	1,00			--
0063	VTDD01694		NUT M6 INOX	1,00			--
0064	LAFN07635		BRACKET -	1,00			--
0065	VTVT15141		SCREW TE M 6X 25 UNI 5739 INX	2,00			--
0066	VTRS13945		WASHER D. 6X18 INX UNI 6593	2,00			--
0067	LAFN06898		SPACER 6-8 h15	2,00			--
0068	LAFN06391		BUSHING BRUSH DECK SUPPORT	2,00			--
0069	VTRS13945		WASHER D. 6X18 INX UNI 6593	2,00			--
0070	VTDD01694		NUT M6 INOX	2,00			--
0071	VTRS13946		WASHER D. 8 X24 INX UNI 6593	1,00			--
0072	VTDD01695		NUT M 8 INX	1,00			--
0073	VTVT15143		SCREW TE 6X16 UNI5739	2,00			--
0074	VTRS15144		WASHER D. 6 INX GRW UNI 1751	2,00			--
0075	VTRS13945		WASHER D. 6X18 INX UNI 6593	1,00			--
0076	VTVT00224		SCREW	1,00		26/02/2019	--
0076	VTVT00129		SCREW TSCE UNI 5933 8X20 ZB	1,00	27/02/2019		--
0077	LAFN06860		BRACKET CT70	1,00			--
0078	VTDD01695		NUT M 8 INX	1,00			--
0079	VTRS13947		WASHER D. 8 INX UNI 6592	1,00			--
0080	VTRS15978		WASHER D.12X24 UNI 6592 INX	1,00			--
0081	MPVR06069		WASHER 15X40	1,00			--
0082	VTRS00579		WASHER	1,00			--
0083	VTVT01008		SCREW 6X110	1,00			--
0084	VTVT13937		SCREW TE M 8X 30 INX UNI 5739	1,00			--
0085	VTVT01009		SCREW 8X60	1,00			--
0086	VTDD15521		NUT M 8 INX A2 UNI 5588	1,00			--
0087	LAFN09231		BRACKET M6X11X29	1,00			--
0088	VTDD00053		NUT M6 INOX UNI5589	2,00			--
0089	VTDD15521		NUT M 8 INX A2 UNI 5588	1,00			--
0090	VTDD01694		NUT M6 INOX	1,00			--
0091	MFVR00227		SUPPORT SQUEEGEE	1,00			--
0092	VTDD01694		NUT M6 INOX	1,00			--
0093	VTRS13945		WASHER D. 6X18 INX UNI 6593	1,00		27/03/2018	--
0093	LAFN06391		BUSHING BRUSH DECK SUPPORT	1,00	28/03/2018		--
0094	MLML00338		SPRING INOX L98 DE18 DI14	1,00			--
0095	VTDD01695		NUT M 8 INX	1,00			--
0096	VTRS00274		WASHER NYLON 66 D.8,4-17-2 UNI	2,00			--
0098	VTRS15146		WASHER GROVER A2 UNI1751	2,00			--

Table: FRAME - DBDB09360 Progressive number: 1

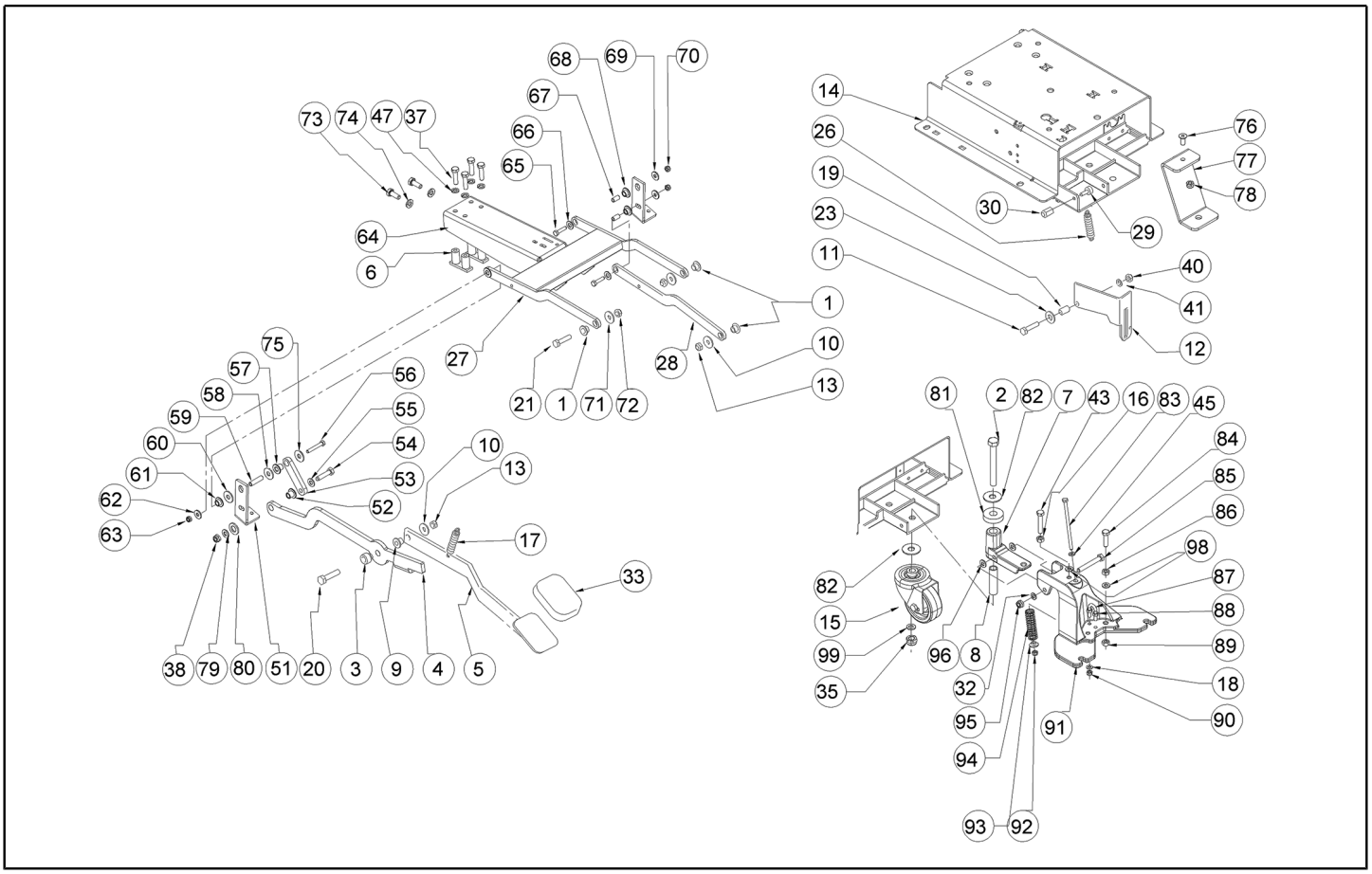

Ref. K	Part n.	Part n. 2	Description	Quantity	Validity From	Validity To	Price
0099	VTRS15919		WASHER D.12 GROVER UNI 1751 INX	1,00			--

Table: CRANKCASE - DBDB09364 Progressive number: 1

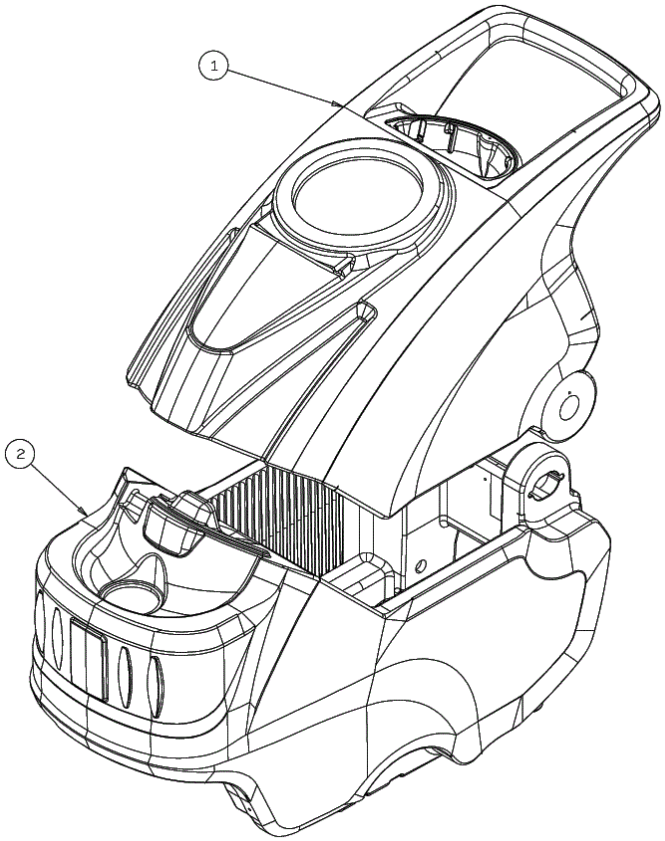

Ref.	K	Part n.	Part n. 2	Description	Quantity	Validity From	Validity To	Price
0001		MPVR04997		TANK RECOVERY CT55 GREEN P368C	1,00			--
0002		MPVR04996		TANK SOLUTION CT55	1,00			--

Table: SOLENOID VALVE - DBDB09529

Progressive number: 1

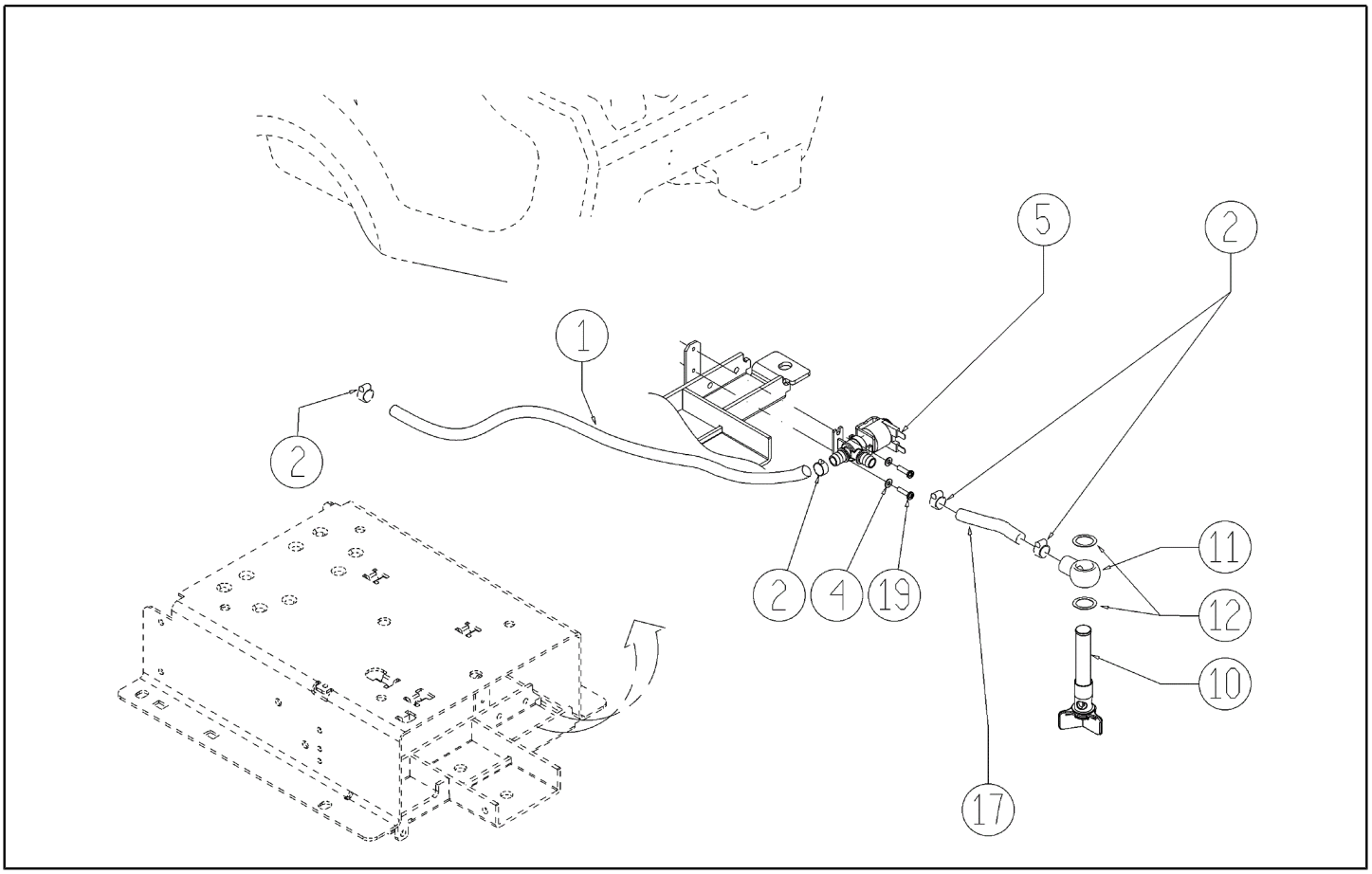

Ref. K	Part n.	Part n. 2	Description	Quantity	Validity From	Validity To	Price
0001	TBFX48011		HOSE FLEX D.12X3 ARMORV.PVC TR	1,05			--
0002	FSVR00428		CLAMP D. 12-20	4,00			--
0004	VTRS00515		WASHER D. 4 INX	2,00			--
0005	MEEV00036		SOLENOID VALVE HOLE 8mm CLEANTIME	1,00			--
0010	MPVR05221		FILTER COMPLETO	1,00		14/02/2013	--
0010	MPVR06303		FILTER CT40-70-90	1,00	15/02/2013		--
0011	LAFN07783		CONNECTOR -	1,00			--
0012	VTRS00567		WASHER 1/2	2,00			--
0017	TBFX48011		HOSE FLEX D.12X3 ARMORV.PVC TR	0,17			--
0019	VTVT01158		SCREW M4x16	2,00			--

Table: FLOOR WIPER - DBDB09611

Progressive number: 1

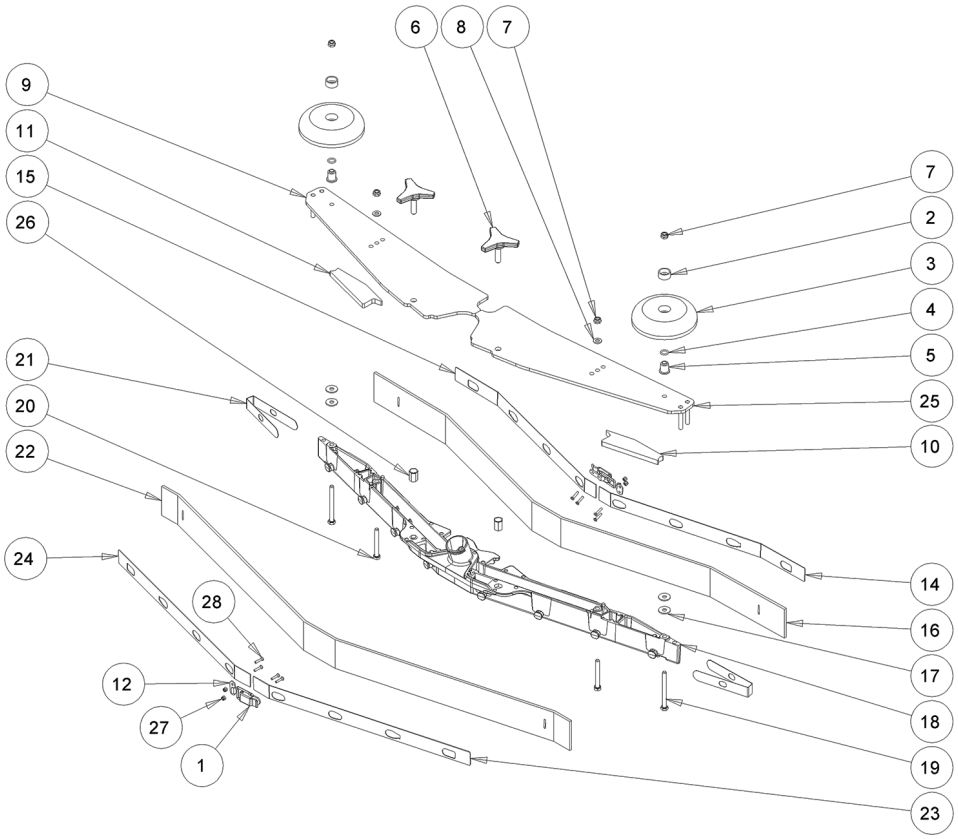

Ref. K	Part n.	Part n. 2	Description	Quantity	Validity From	Validity To	Price
0001	LAFN09302		CLOSURE -	2,00	26/09/2013		--
0002	MPVR49229		BUSHING SHK	2,00			--
0003	MPVR05290		ROLLER SIDE BUMPER WHEEL	2,00			--
0004	GUGO00164		GASKET	2,00			--
0005	LAFN04100		SPACER FOR BUMPER WHEEL	2,00			--
0006	MPVR06003		KNOB AISI 304	2,00		05/03/2013	--
0006	MPVR06004		KNOB SQUEEGEE YELLOW M8X30	2,00	06/03/2013		--
0007	VTDD01700		NUT M6 INOX+ZIN.	4,00			--
0008	VTRS00245		WASHER D.6 UNI 6592 INOX	2,00			--
0009	LAFN09012		PLATE -	1,00			--
0010	GUVR00301		GASKET -	1,00			--
0011	GUVR00300		GASKET -	1,00			--
0012	LAFN09301		SOCKET -	2,00	26/09/2013		--
0014	LAFN08948		BRACKET -	1,00		25/09/2013	--
0014	LAFN09279		BLADE HOLDER S SIZE ANT. RIGHT	1,00	26/09/2013		--
0015	LAFN08949		BRACKET -	1,00		25/09/2013	--
0015	LAFN09280		SHEET METAL PA. -	1,00	26/09/2013		--
0016	MPVR08039		BLADE S LATEX	1,00			--
0017	VTRS13945		WASHER D. 6X18 INX UNI 6593	4,00			--
0018	KTRI02048		BODY SQUEEGEE ALUMINUM S	1,00			--
0019	VTVT00841		SCREW TE M 6X65 UNI 5739 INX	2,00			--
0020	VTVT15515		SCREW TE M 6X 50 INOX A2	2,00			--
0021	MPVR05897		CLOSURE S	2,00			--
0022	MPVR08035		BLADE S LATEX	1,00			--
0023	LAFN08950		BRACKET -	1,00		25/09/2013	--
0023	LAFN09281		SHEET METAL PA. -	1,00	26/09/2013		--
0024	LAFN08951		BRACKET -	1,00		25/09/2013	--
0024	LAFN09283		BLADE HOLDER S SIZE POST. LEFT	1,00	26/09/2013		--
0025	LAFN09013		PLATE -	1,00			--
0026	VTVR00565		INSERT -	2,00			--
0027	VTDD00210		NUT M 3 AUTOBL.DIN 985 IX.A2	8,00	26/09/2013		--
0028	VTVT01070		SCREW TSTC M3X8	8,00	26/09/2013		--